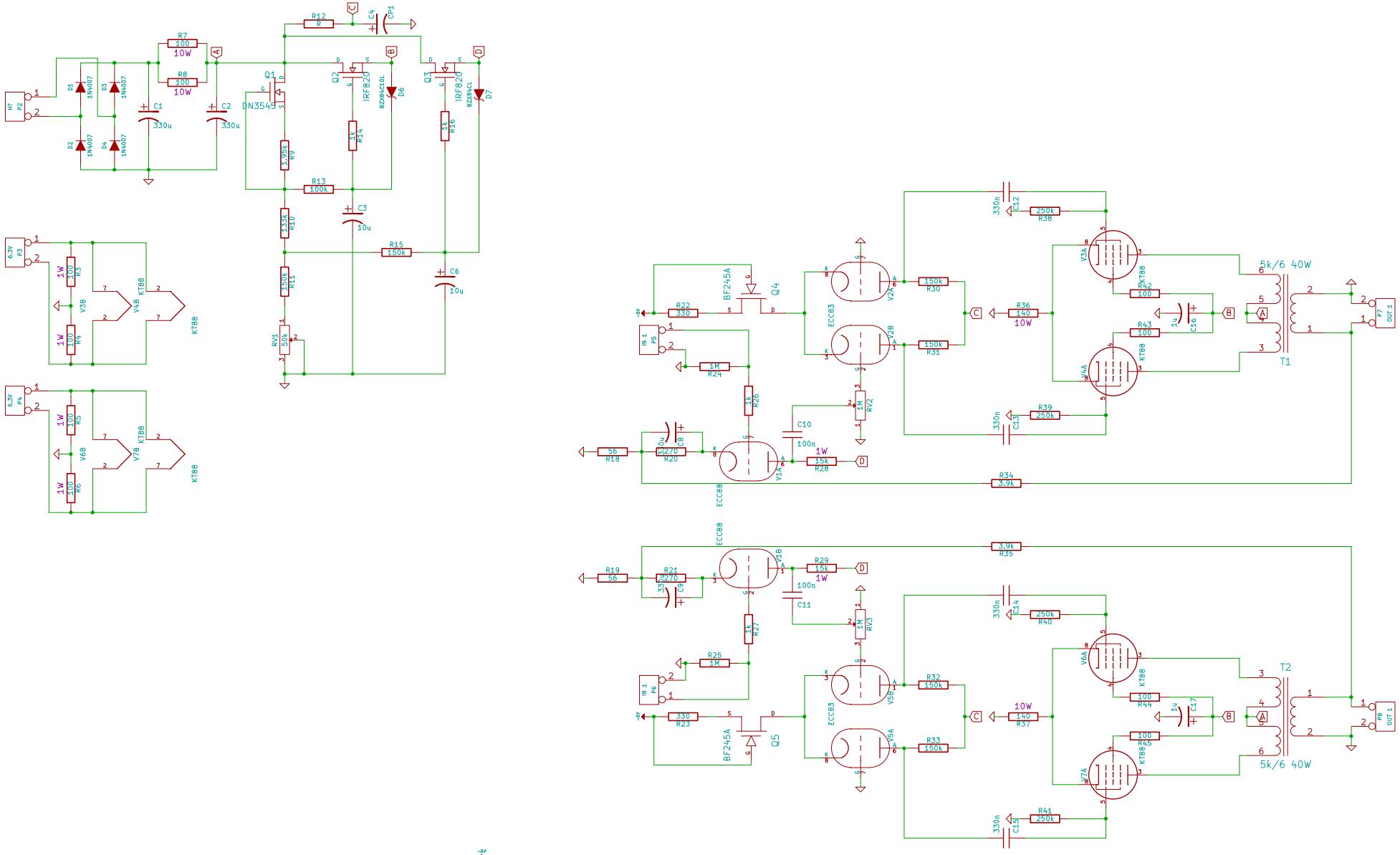

McPinpin Electronics		
File: McP40 V1.sch		
Sheet: /		
Title: McP40		
Size: A3	Date: 2 sep 2012	Rev: 1
KiCad E.D.A. eeschema (2012-01-19 BZR 3256)-stable		Id: 1/1